SMART Board® 8055i Interactive Flat Panel

SHOWN WITHOUT OPTIONAL TABLE STAND FEET (NOT INCLUDED)

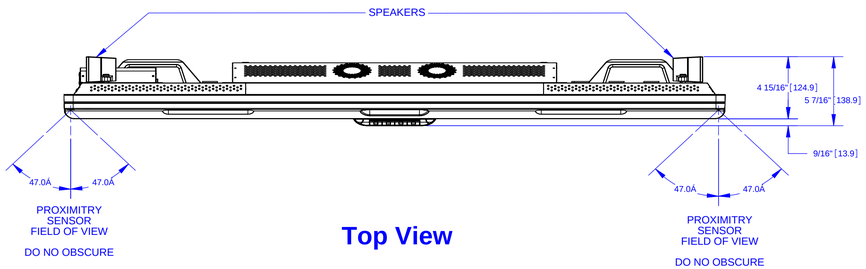

Top View

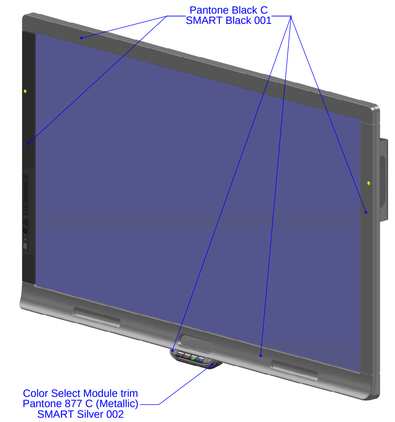

Isometric View

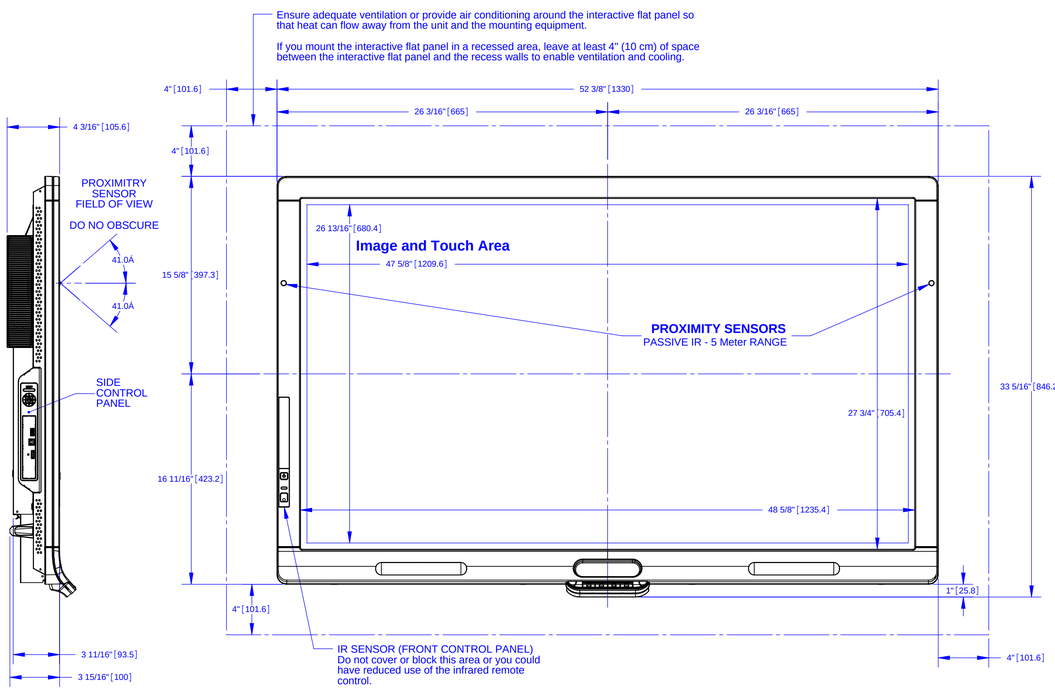

Left Side View

Front View

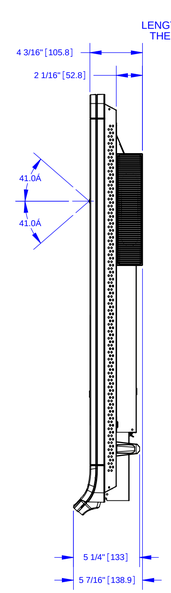

Side View

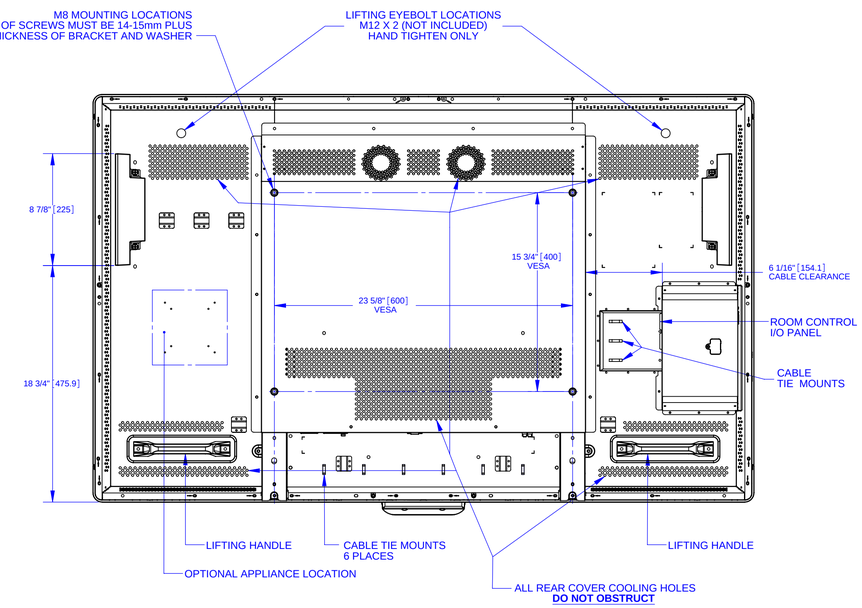

Back View

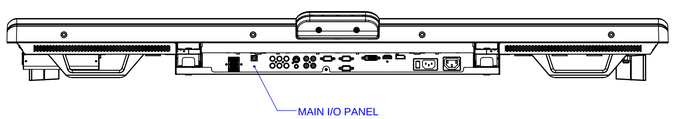

Bottom View

These drawings are for outline and installation purposes only.

All dimensions are given in inches (millimeters).

Dimensions are subject to change without notice.

All dimensions +/-1/8 (3mm)

NOTE: DO NOT SCALE

The contents of this document are compiled from a variety of documents to provide a consolidated view of key criteria. Should there be any information you need that is not adequately captured in either this document or the related documents, please contact us at ecosystem@smarttech.com for assistance.

This document is uncontrolled at the time of printing. Please ensure you are using the latest revision available at sen.smarttech.com

3636 Research Road NW
Calgary, Alberta T2L 1Y1
CANADA

É 2012 SMART Technologies ULC.
All rights reserved.
The SMART logo, smarttech and all SMART taglines are trademarks or registerd trademarks of SMART Technologies ULC in the U.S. and/or other countries.
Patent No. US6320597; US6326954; US6563491; US6741267; US6803906; US6829372; US6947032; US6954197; US6972401; US7151533; US7236162; US7411575; US7619617; US7643006; US7692625; US7755613; US7757001; US7880720; USD612396; USD616462; USD617332; USD636784

Other patents pending. 04/2012.

Description: Ecosystem Drawing - IFP8055i

Part Number: 6005747 | Revision: 01

SMART Board® 8055i Interactive Flat Panel

SHOWN WITH OPTIONAL TABLE STAND FEET (NOT INCLUDED)

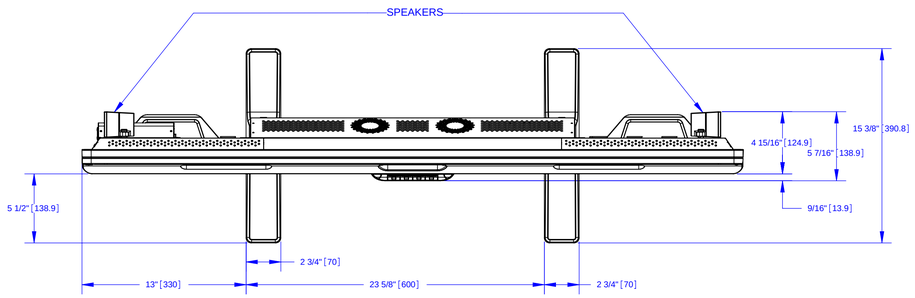

Top View

Isometric View

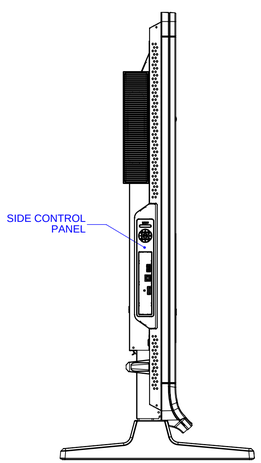

Left Side View

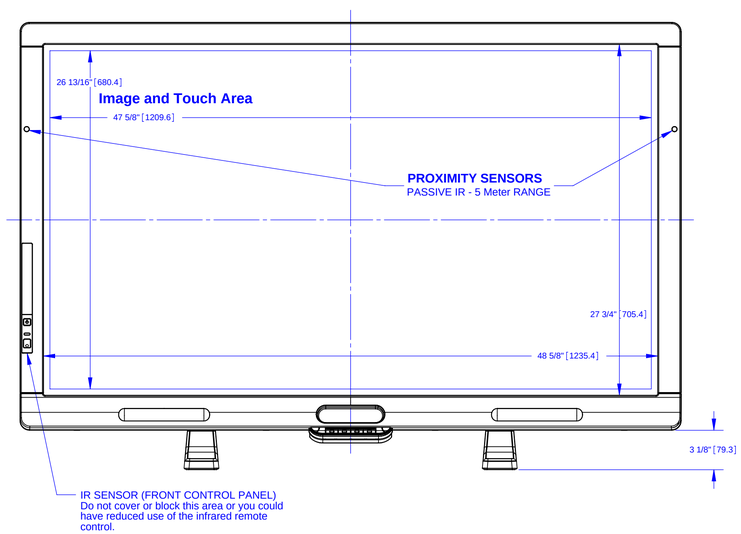

Front View

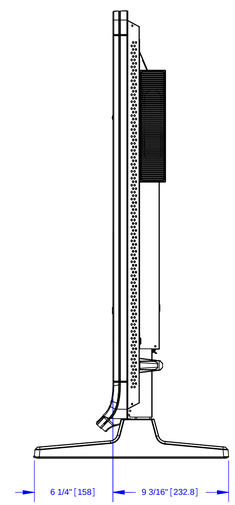

Side View

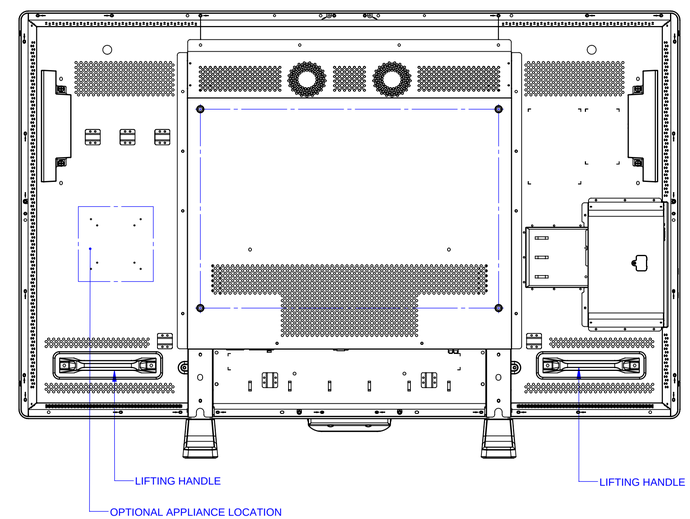

Back View

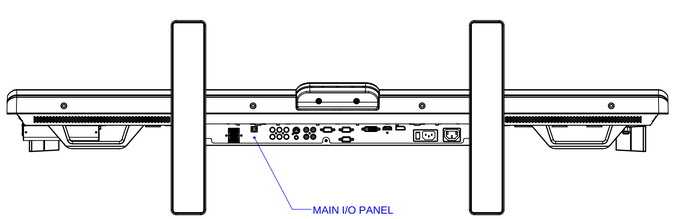

Bottom View

These drawings are for outline and installation purposes only.

All dimensions are given in inches (millimeters).

Dimensions are subject to change without notice.

All dimensions +/-1/8 (3mm)

NOTE: DO NOT SCALE

The contents of this document are compiled from a variety of documents to provide a consolidated view of key criteria. Should there be any information you need that is not adequately captured in either this document or the related documents, please contact us at ecosystem@smarttech.com for assistance.

This document is uncontrolled at the time of printing. Please ensure you are using the latest revision available at sen.smarttech.com

3636 Research Road NW
Calgary, Alberta T2L 1Y1
CANADA

É 2012 SMART Technologies ULC.
All rights reserved.
The SMART logo, smarttech and all SMART taglines are trademarks or registerd trademarks of SMART Technologies ULC in the U.S. and/or other countries.
Patent No. US6320597; US6326954; US6563491; US6741267; US6803906; US6829372; US6947032; US6954197; US6972401; US7151533; US7236162; US7411575; US7619617; US7643006; US7692625; US7755613; US7757001; US7880720; USD612396; USD616462; USD617332; USD636784

Other patents pending. 04/2012.

Description: Ecosystem Drawing - IFP8055i

Part Number: 6005747 | Revision: 01

SMART Board® 8055i Interactive Flat Panel

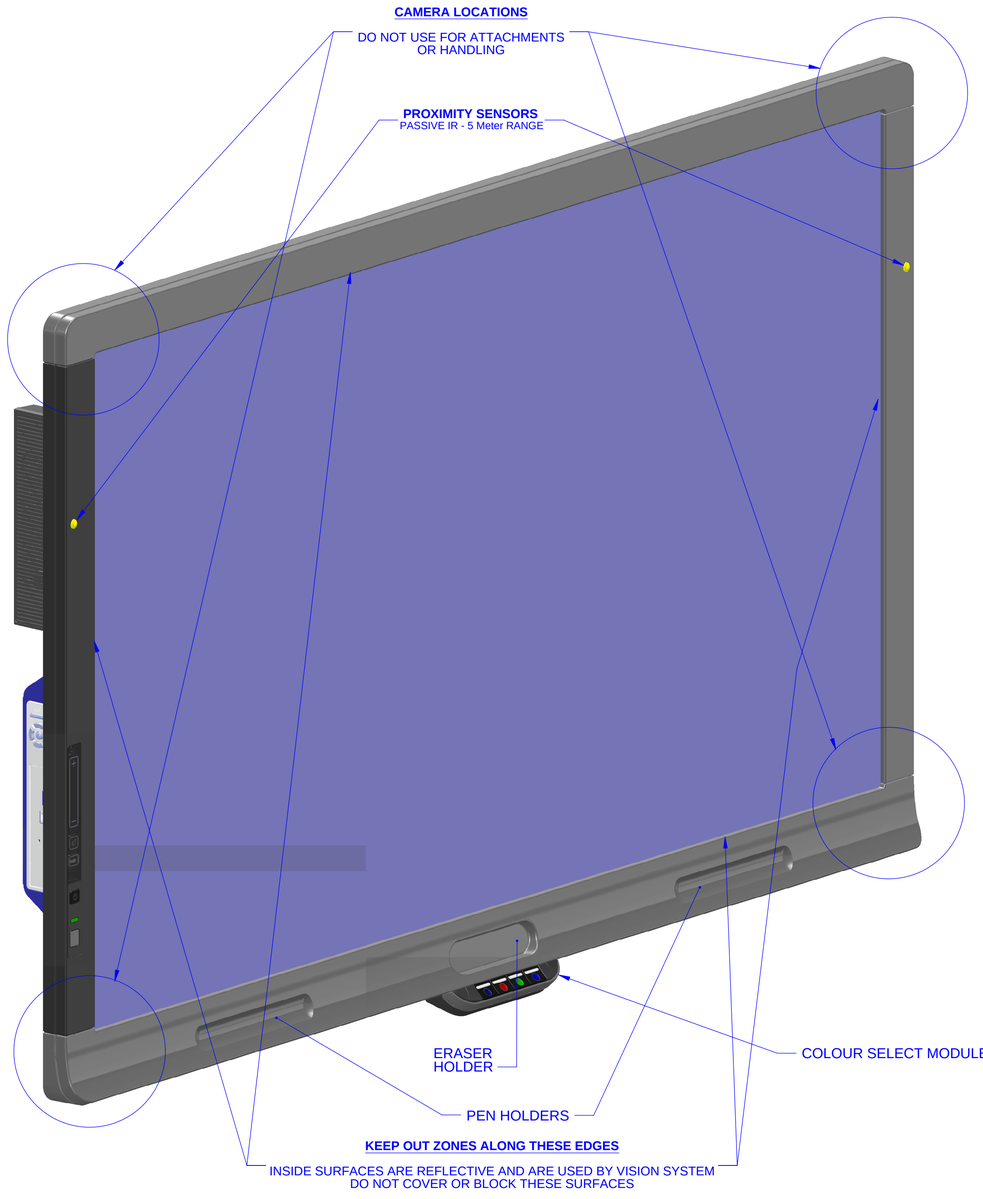

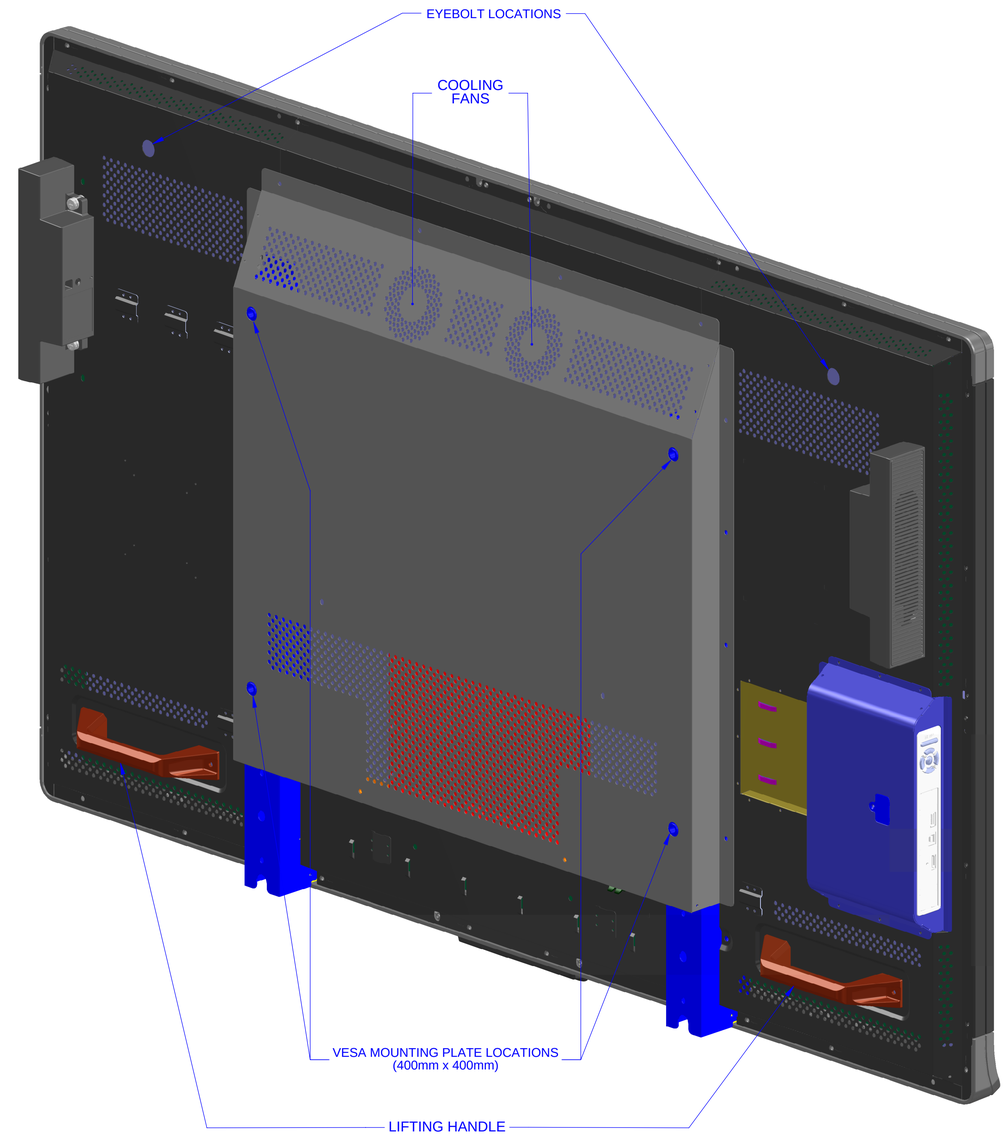

These drawings are for outline and installation purposes only.

All dimensions are given in inches (millimeters).

Dimensions are subject to change without notice.

All dimensions +/-1/8 (3mm)

NOTE: DO NOT SCALE

The contents of this document are compiled from a variety of documents to provide a consolidated view of key criteria. Should there be any information you need that is not adequately captured in either this document or the related documents, please contact us at ecosystem@smarttech.com for assistance.

This document is uncontrolled at the time of printing. Please ensure you are using the latest revision available at sen.smarttech.com

3636 Research Road NW
Calgary, Alberta T2L 1Y1
CANADA

É 2012 SMART Technologies ULC.
All rights reserved.
The SMART logo, smarttech and all SMART taglines are trademarks or registerd trademarks of SMART Technologies ULC in the U.S. and/or other countries.
Patent No. US6320597; US6326954; US6563491; US6741267; US6803906; US6829372; US6947032; US6954197; US6972401; US7151533; US7236162; US7411575; US7619617; US7643006; US7692625; US7755613; US7757001; US7880720; USD612396; USD616462; USD617332; USD636784

Other patents pending. 04/2012.

Description: Ecosystem Drawing - IFP8055i

Part Number: 6005747 | Revision: 01